LTR	Zone	REVISION RECORD / Description	DWN/CHK	DATE	LTR	Zone	REVISION RECORD / Description	DWN/CHK	DATE
1		New Release		12/19/05					
2									

DRAWING NUMBER
JF2-140316-FP3

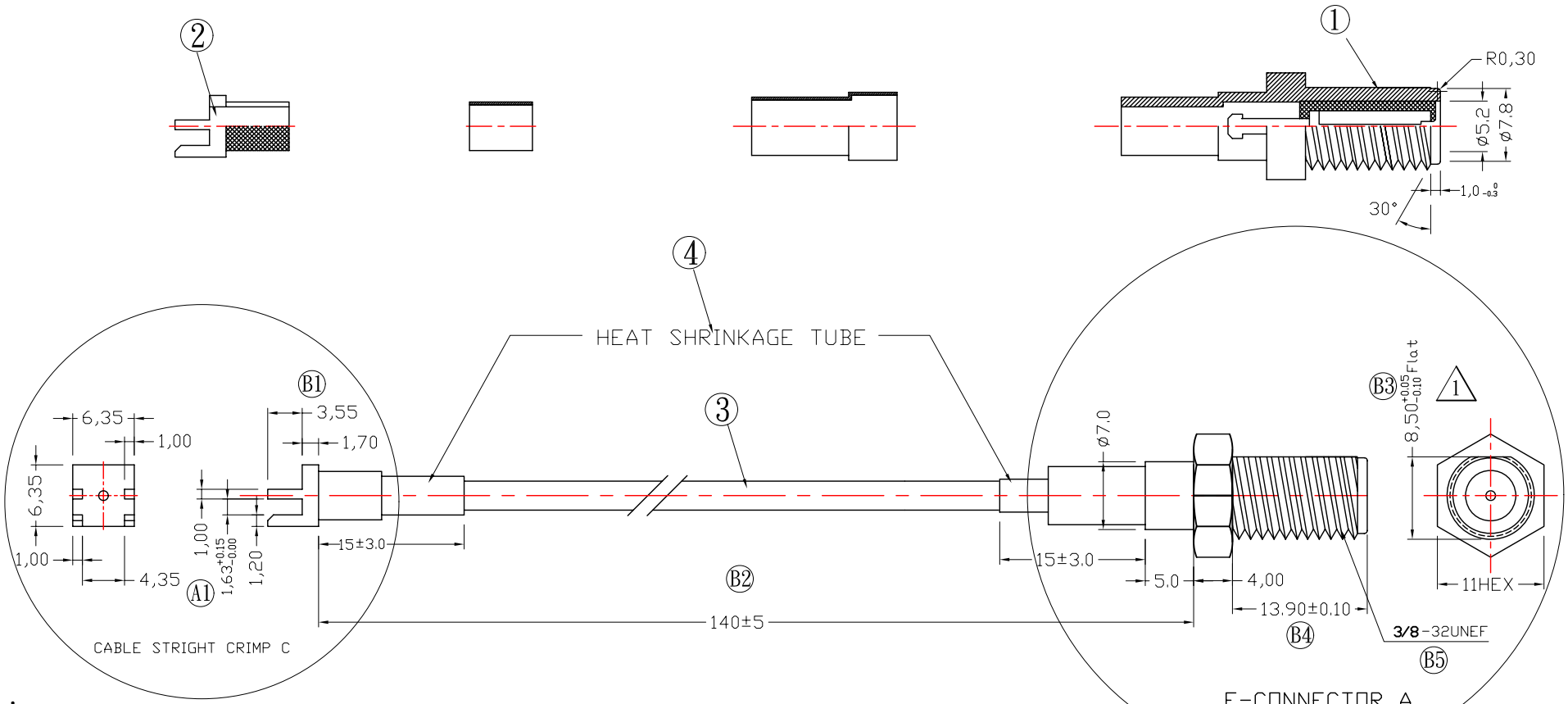

注：

1、THE APPEARANCE AND CHARACTERISTIC REQUSETED TO SPECIFICATION

2、其中標有Ⓐx尺寸要求供應商每批出貨時提供CPK數據

3、其中標有Ⓑx尺寸是首件，制程檢查，出貨檢查重點控制尺寸

4、電性能要求：要求在90MHZ,150MHZ,200MHZ,250MHZ,四個頻點所測的衰減系數均小0.5db

NO	DESCRIPTION	Q'ty	MATERIAL	Part Number
4	Shrink Tube Ø3.5 Black	2		M05-035003-BL
3	Coaxial Cable:RG316 50 Ohms	1	RG-316	M02-316WON-00
2	F Style PCB Conn For RG316 Gold	1	BRASS	M01-FSY316-PC
1	CN F-Jack Blk 單剖平面 Nickel	1	BRASS	M01-0FJ139-1N

UNIT mm	APVD	DESCRIPTION: JC F J(1剖) Ni -PCB F CN RG316 L140mm 客戶料號：1803-14001K52	
MATERIAL SEE NOTE	CHK	DIMENSION: 1 PLC ±0.5, 2 PLC ±0.3, 3 PLC ±0.2, ANGLES ±5°	PART NUMBER JF2-140316-FP3 / REV 1
FINISH SEE NOTE	DWN CSH		SIZE A4 / SCALE 1/1 / SHEET 1 OF 1